ROHS

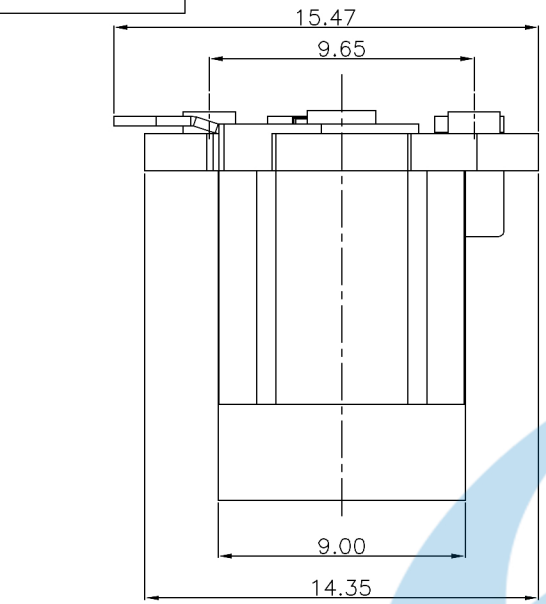

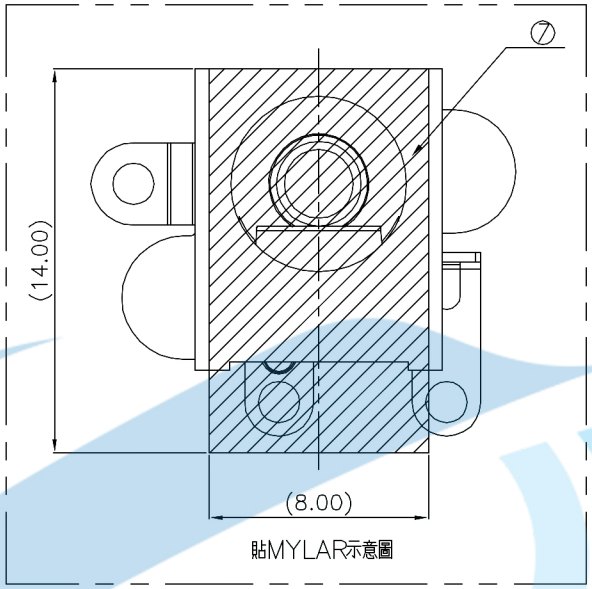

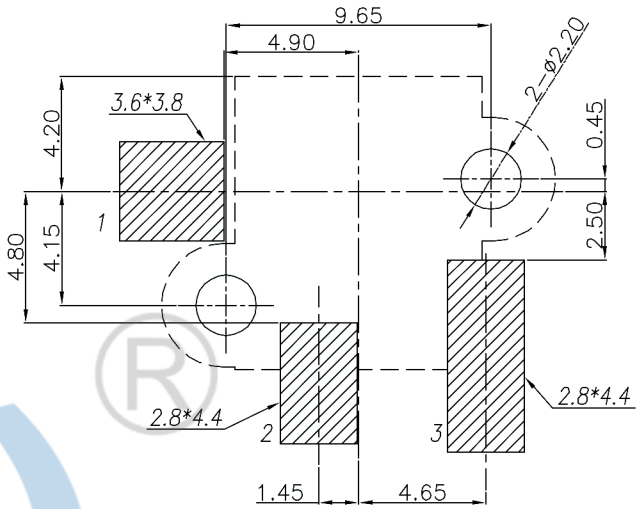

PCB LAYOUT TOP VIEW

TOLERANCES:±0.05

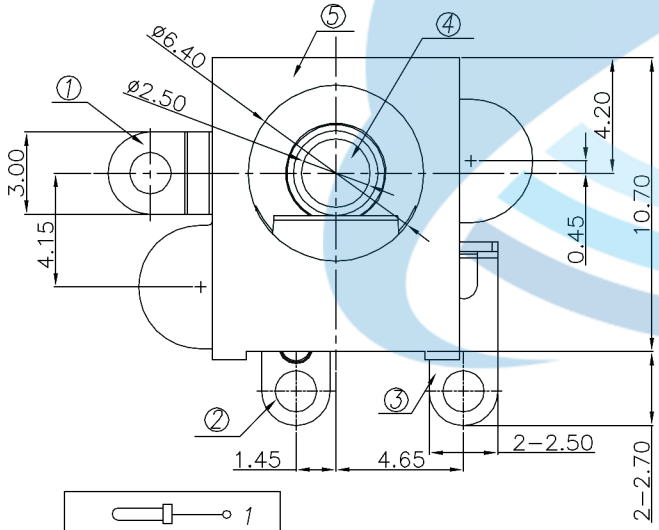

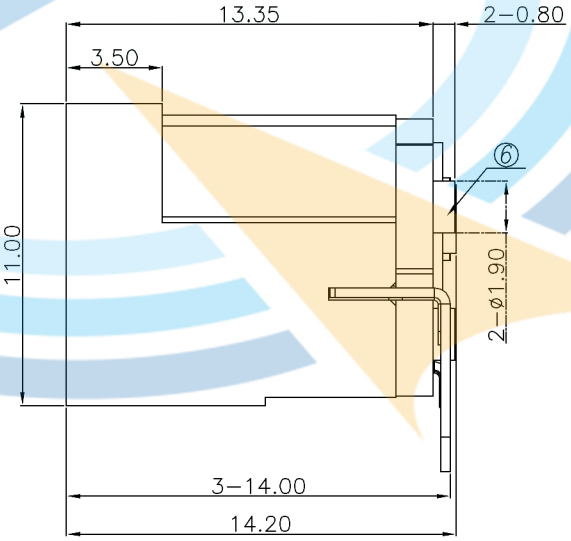

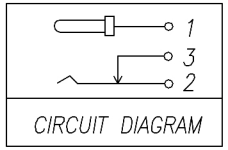

CIRCUIT DIAGRAM

SPECIFICATIONS:

1. ELECTRICAL CHARACTERISTICS:
   - 1-1. RATING: 20V, 7A Min.
   - 1-2. CONTACT RESISTANCE:
     50 MILLIOHMS Max. FOR INITIAL,
     80 MILLIOHMS Max. AFTER 5000 CYCLES.
   - 1-3. INSULATION RESISTANCE: 100 MEGAOHMS Min. BY 500V DC AFTER 1 MINUTE.
   - 1-4. DIELECTRIC WITHSTANDING VOLTAGE: 500V RMS AFTER 1 MINUTE.
2. MECHANICAL CHARACTERISTICS:
   - 2-1. INSERTION FORCE : 0.3~3.0 KGF(2.94~29.4N)
   - 2-2. WITHDRAWAL FORCE : 0.3~3.0 KGF(2.94~29.4N)
3. LIFE TEST: 5,000 CYCLES MIN.

ITEM	PART NAME	TER'NO.	QTY.	MATERIAL	FINISHING	REMARK
⑦	COVER	——	1	N/A	AMBER	——
⑥	COVER	——	1	NYLON	Black	——
⑤	HOUSING	——	1	NYLON	Black	——
④	CENTER PIN	——	1	BRASS ø2.5	Ni Plating	——
③	TERMINAL 3	——	1	COPPER ALLOY	Ag Plating	——
②	TERMINAL 2	——	1	COPPER ALLOY	Ag Plating	——
①	TERMINAL 1	——	1	COPPER ALLOY	Ag Plating	——

APPROVALS		DATE
DRAWN	JKUN.LU	2013/11/11
CHECKED		
APPROVALS		

东莞市颖鑫电子科技有限公司

TITLE: DC POWER JACK

PART NO. DC-182

TOLERANCES ARE			ANGLE
	30~以上	±0.30	±2°
	10~30	±0.20	
	5~10	±0.15	
	~ 5	±0.10	

UNIT: mm | SCALE: 1:1 | PROJ:

DRAWING NO. —— | SHEET 1 OF 1

ECN NO.	REV.	DATE.	DESCRIPTION.	CHANGE.	CHECK.	APPRO.
——	A	——	NEW	——	——	——