**ROHS**

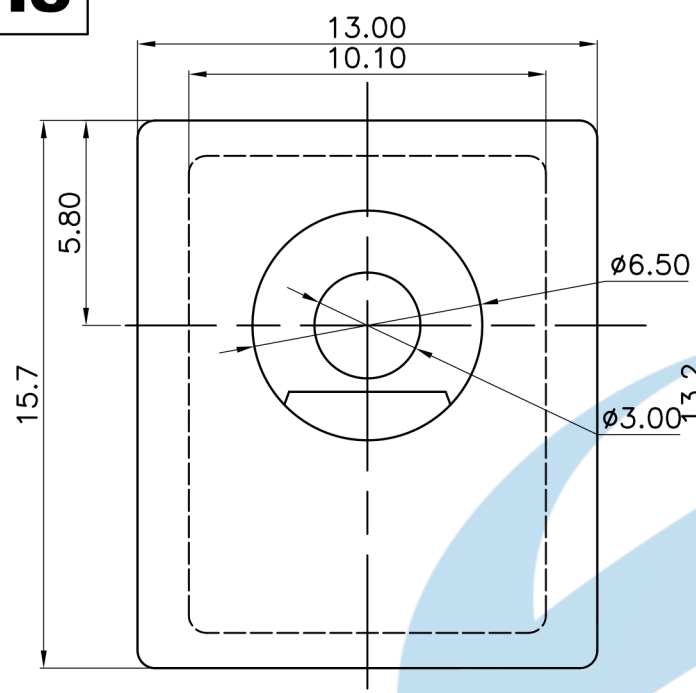


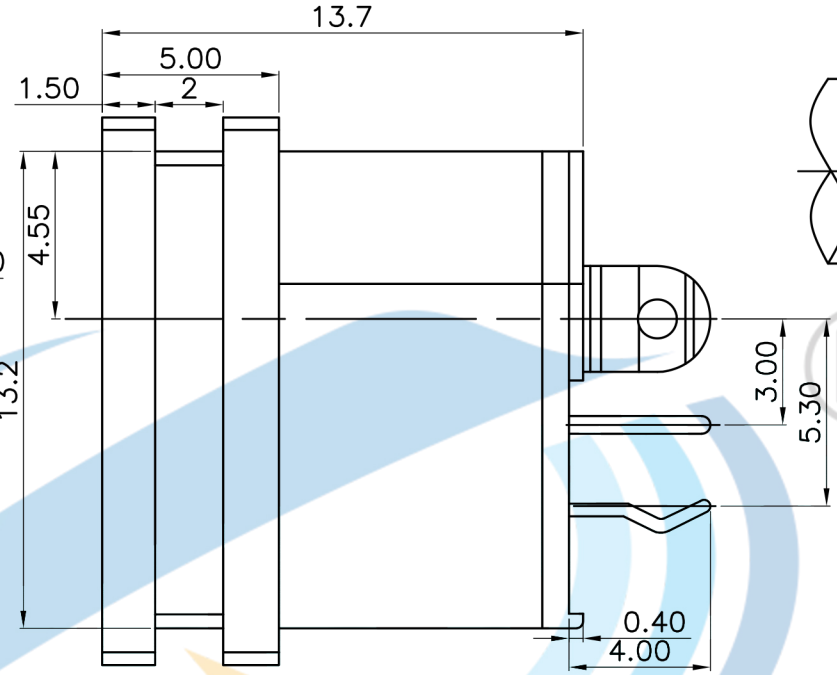


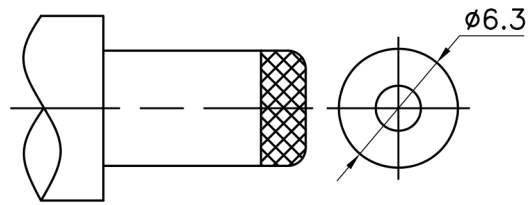


DC MATE PLUG

| DC-015B-A | DC-015B-B |
|---|---|
| 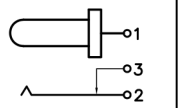 | 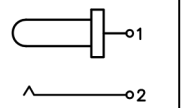 |
| CIRCUIT DIAGRAM | |

P.C.B LAYOUT(Copper-side view)

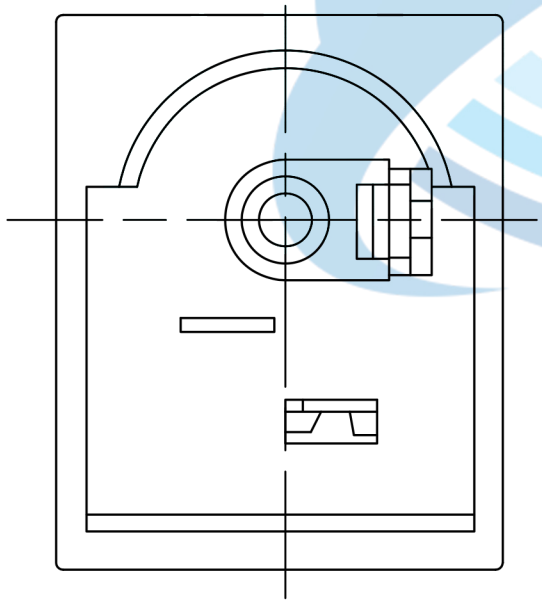

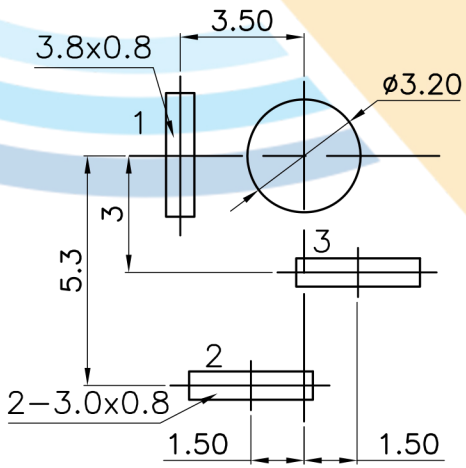


Rating:0.5A 30V DC
Contact Resistance:100 mΩ Max.
Operating temperature:-20℃~70℃
Operating force:3-20N
Operating Life:5,000cycles

| ITEM | PART NAME | TER'NO. | QTY. | MATERIAL | FINISHING | REMARK |
|---|---|---|---|---|---|---|
| ② | Terminal | —— | 3 | Phosphor bronze | Au Plating | —— |
| ① | Housing | —— | 1 | Nylon | Black | —— |

| APPROVALS | | DATE |
|---|---|---|
| DRAWN | J.X.Zhang | 2013/11/11 |
| CHECKED | | |
| APPROVALS | | |

东莞市颖鑫电子科技有限公司

TITLE: PHONE JACKES

PART NO. DC-015B

| TOLERANCES ARE | | | ANGLE | UNIT: mm | SCALE: 1:1 | PROJ: |
|---|---|---|---|---|---|---|
| | 30~以上 | ±0.30 | ±2° | DRAWING NO. | —— | SHEET 1 OF 1 |
| | 10~30 | ±0.20 | | | | |
| | 5~10 | ±0.15 | | | | |
| | ~ 5 | ±0.10 | | | | |

| ECN NO. | REV. | DATE. | DESCRIPTION. | CHANGE. | CHECK. | APPRO. |
|---|---|---|---|---|---|---|
| —— | A | —— | NEW | —— | —— | —— |